Pierre Gonalons

All Around armchair

Dimensions:
W 86 | D 66 | H 70 cm
W 33,8 | D 26 | H 27,5 in

Materials:
plywood base and back, polyurethane foam structure covered with cotton velvet Kvadrat/Raf Simons or with linen cotton Métaphores

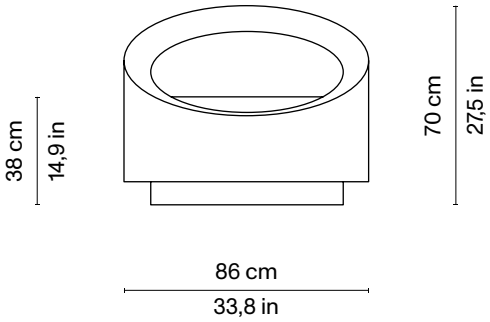

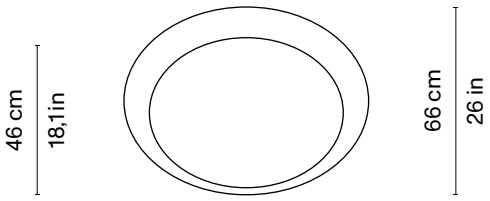

paradisoterrestre

Pierre Gonalons

All Around armchair

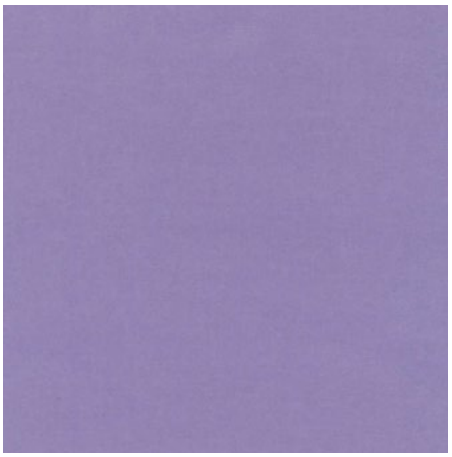

Kvadrat/Raf Simons
Harald 3

Composition:
100% cotton

Available colours:

0123 0133 0143 0182 0192 0212 0233 0242 0283 0343 0382 0423

0432 0443 0512 0533 0543 0552 0582 0612 0632 0652 0692 0722

0772 0792 0823 0942 0952 0982

Métaphores
Spuma

Composition:
42% cotton, 22% linen, 36% viscose

Available colours:

71386/001 71386/002 71386/003 71386/004 71386/005 71386/006 71386/007 71386/008

71386/009 71386/010 71386/011 71386/012 71386/013

* Please note that colours displayed digitally may vary slightly from the actual product.